(1) Schematic Diagrams of D (1/2, 2/2) Board

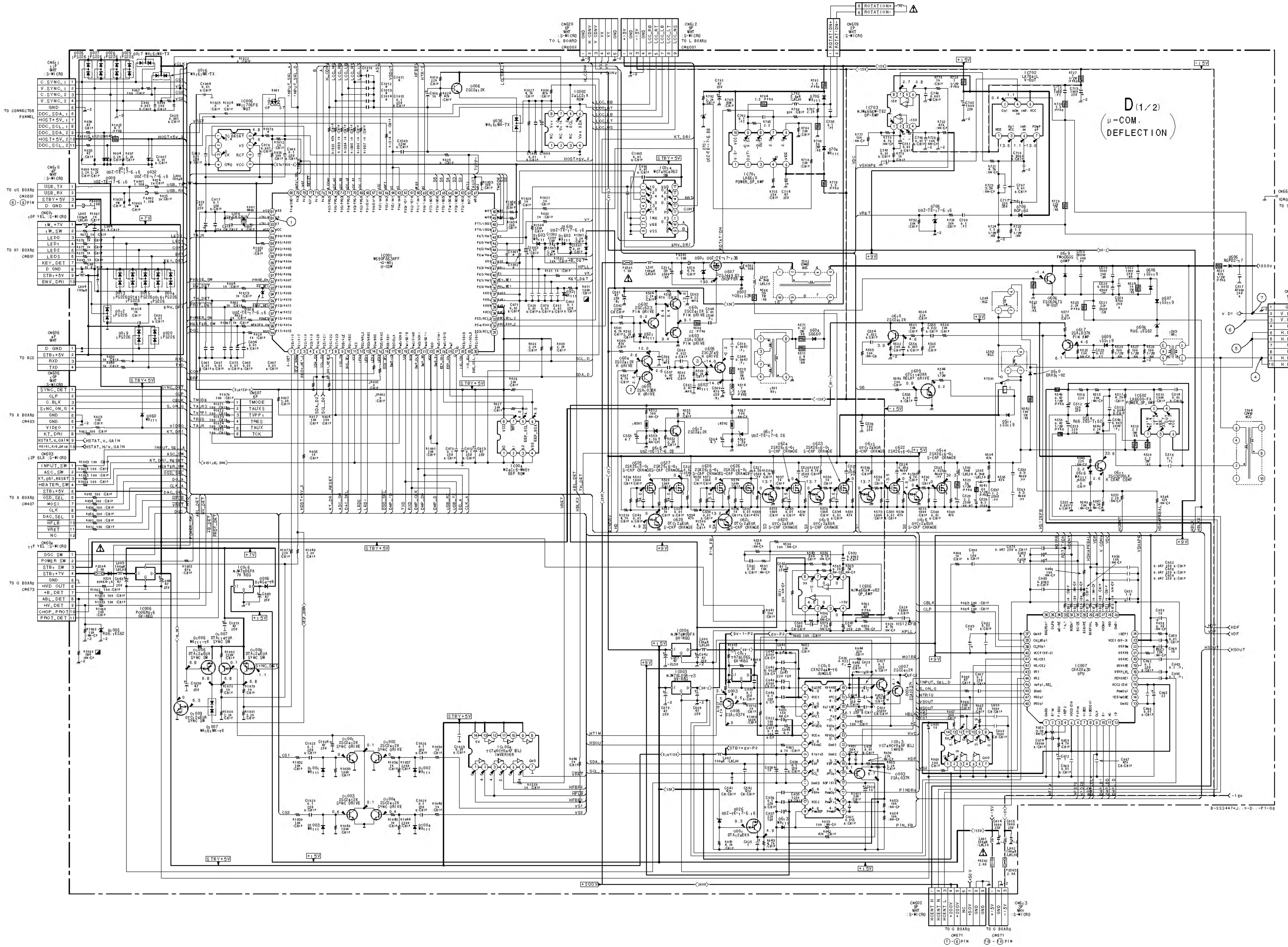

D (1/2)
µ-COM.
DEFLECTION
TO CONNECTOR PANNEL
C_SYNC_1
V_SYNC_1
C_SYNC_2
V_SYNC_2
GND
DDC_SDA_1
HOST+5V_1
DDC_SCL_1
DDC_SDA_2
HOST+5V_2
DDC_SCL_2
USB_TX
USB_RX
STBY+5V
D_GND
KEY_DET
ENV_DRI
RXD
TXD
SYNC_DET
CLP
G_BLK
SYNC_ON_G
VIDEO
KT_DRI
INPUT_SW
ASC_SW
HEATER_SW
OSD_SEL
MOSI
CLK
DAC_SEL
HFLB
VRET
NC
DGC_SW
POWER_SW
STBY_SW
STBY+7V
HVD_OUT
+B_DET
ABL_DET
HV_DET
CHOP_PROT
PROT_DET
IC001
ROTATION+
ROTATION-
STBY+5V
+5V
+9V
+15V
-15V
+200V
+1000V
GND
V.DY C
V.DY H
NC
H.DY C
H.DY H
TO G BOARD

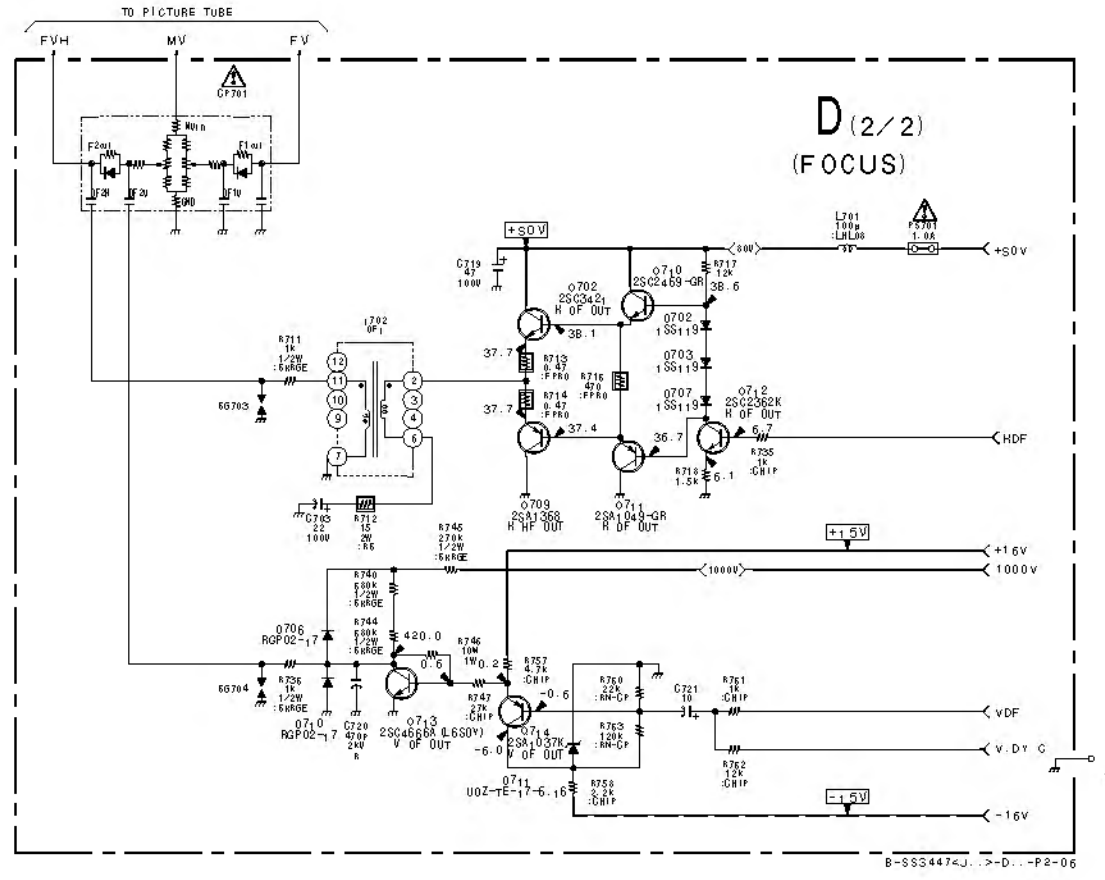

TO PICTURE TUBE
FVH
MV
FV
D (2/2)
(FOCUS)
+50V
HDF
+16V
1000V
VDF
-16V

(4) Schematic Diagram of US Board

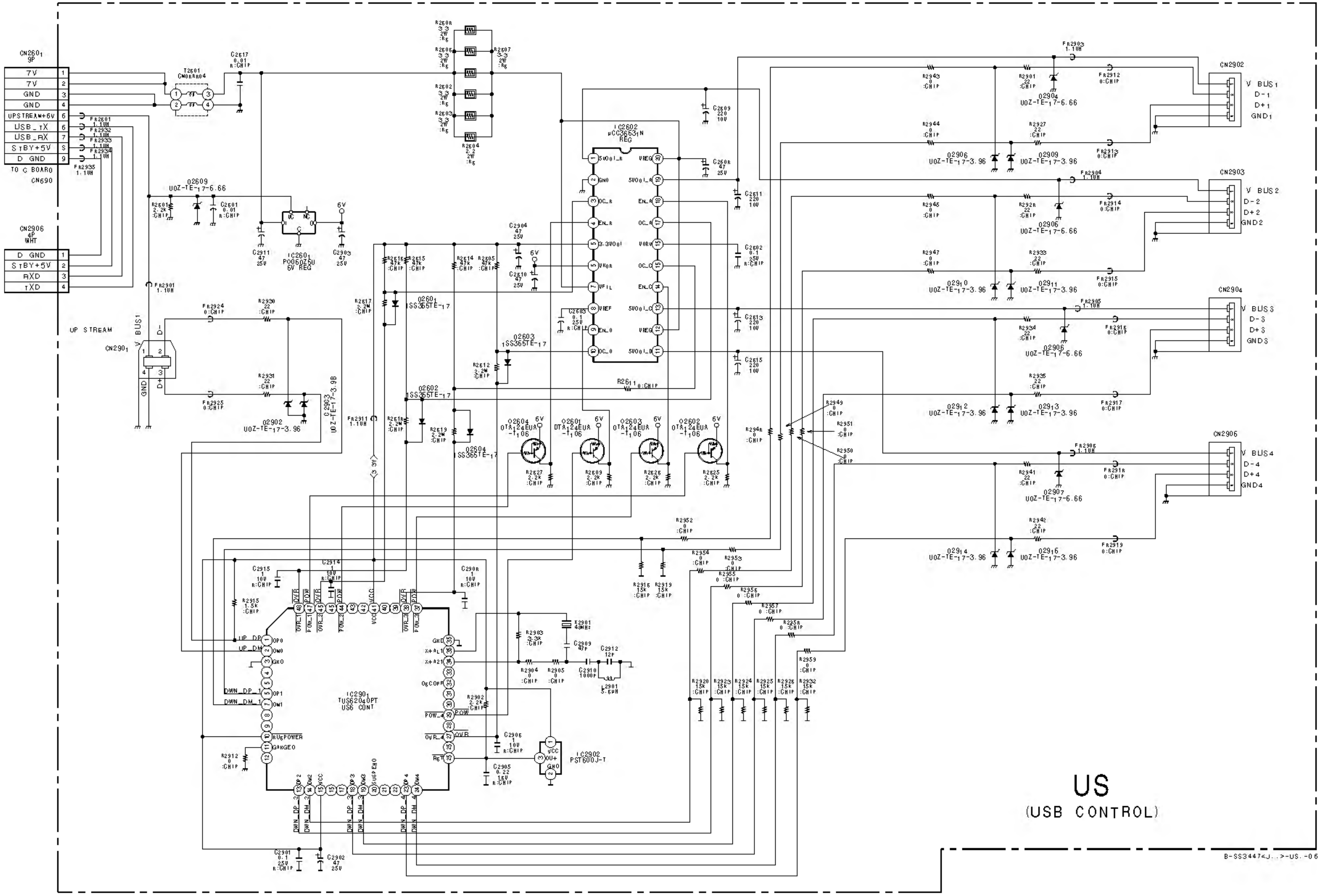
CN2601 9P
7V
7V
GND
GND
UPSTREAM+6V
USB_TX
USB_RX
STBY+5V
D GND
TO C BOARD CN690
CN2906 4P WHT
D GND
STBY+5V
RXD
TXD
T2601 CWBRR604
C2617 0.01
FR2601 1.1UH
FR2932 1.1UH
FR2933 1.1UH
FR2934 1.1UH
FR2935 1.1UH
FR2901 1.1UH
D2609 UOZ-TE-17-6.66
R2601 2.2k
C2601 0.01
IC2601 PQ060Z5U 6V REG
C2911 47 25V
C2903 47 25V
6V
R2606 3.3 2W
R2607 3.3 2W
R2605 3.3 2W
R2602 3.3 2W
R2603 3.3 2W
R2604 2.2 2W
IC2602 µCC3663IN REG
5VOUT_A
GND
OC_A
EN_A
3.3VOUT
VHOR
VFIL
VREF
EN_D
OC_D
VREG
5VOUT_A
EN_B
OC_B
VORH
OC_C
EN_C
5VOUT_C
VREG
5VOUT_D
C2609 220 10V
C2608 47 25V
C2611 220 10V
C2602 0.1 25V
C2613 220 10V
C2615 220 10V
C2604 47 25V
C2610 47 25V
C2603 0.1 25V
R2611 0
R2616 47k
R2615 47k
R2614 47k
R2605 47k
R2617 2.2M
D2601 1SS355TE-17
D2603 1SS355TE-17
D2602 1SS355TE-17
D2604 1SS355TE-17
R2612 2.2M
R2618 2.2M
R2619 2.2M
Q2604 DTA124EUA-T106
Q2601 DTA124EUA-T106
Q2603 DTA124EUA-T106
Q2602 DTA124EUA-T106
R2627 2.2k
R2609 2.2k
R2626 2.2k
R2625 2.2k
UP STREAM
CN2901
V BUS1
D-
D+
GND
FR2924 0
R2930 22
R2931 22
FR2925 0
D2902 UOZ-TE-17-3.96
D2903 UOZ-TE-17-3.98
FR2911 1.1UH
CN2902
V BUS1
D-1
D+1
GND1
CN2903
V BUS2
D-2
D+2
GND2
CN2904
V BUS3
D-3
D+3
GND3
CN2905
V BUS4
D-4
D+4
GND4
FR2903 1.1UH
FR2904 1.1UH
FR2905 1.1UH
FR2906 1.1UH
R2943 0
R2944 0
R2945 0
R2947 0
R2901 22
R2927 22
R2928 22
R2933 22
R2934 22
R2935 22
R2941 22
R2942 22
FR2912 0
FR2913 0
FR2914 0
FR2915 0
FR2916 0
FR2917 0
FR2918 0
FR2919 0
D2904 UOZ-TE-17-6.66
D2905 UOZ-TE-17-6.66
D2906 UOZ-TE-17-6.66
D2907 UOZ-TE-17-6.66
D2906 UOZ-TE-17-3.96
D2909 UOZ-TE-17-3.96
D2910 UOZ-TE-17-3.96
D2911 UOZ-TE-17-3.96
D2912 UOZ-TE-17-3.96
D2913 UOZ-TE-17-3.96
D2914 UOZ-TE-17-3.96
D2915 UOZ-TE-17-3.96
R2948 0
R2949 0
R2951 0
R2950 0
R2952 0
R2954 0
R2953 0
R2955 0
R2956 0
R2957 0
R2958 0
R2959 0
R2916 15k
R2919 15k
R2920 15k
R2923 15k
R2924 15k
R2925 15k
R2926 15k
R2932 15k
IC2901 TUSB2040PT USB CONT
UP_DP
UP_DM
DP0
DM0
GND
DWN_DP_1
DWN_DM_1
DP1
DM1
BUSPOWER
GANGED
OVR_1
POW_1
OVR_2
POW_2
VCC
OVR_3
POW_3
GND
XTAL1
XTAL2
OSCOFF
POW_4
OVR_4
RESET
DP2
DM2
VCC
DP3
DM3
SUSPEND
DP4
DM4
DWN_DP_2
DWN_DM_2
DWN_DP_3
DWN_DM_3
DWN_DP_4
DWN_DM_4
C2915 1 10V
C2914 1 10V
C2908 1 10V
R2915 1.5k
R2912 0
R2903 3.3k
R2904 0
R2905 0
X2901 48MHz
C2909 47P
C2912 12P
C2910 1000P
L2901 5.6UH
R2902 2.2k
C2906 1 10V
C2905 0.22 16V
IC2902 PST600J-T
VCC
OUT
GND
C2901 0.1 25V
C2902 47 25V
(3.3V)
US
(USB CONTROL)
B-SS3447<J..>-US.-06

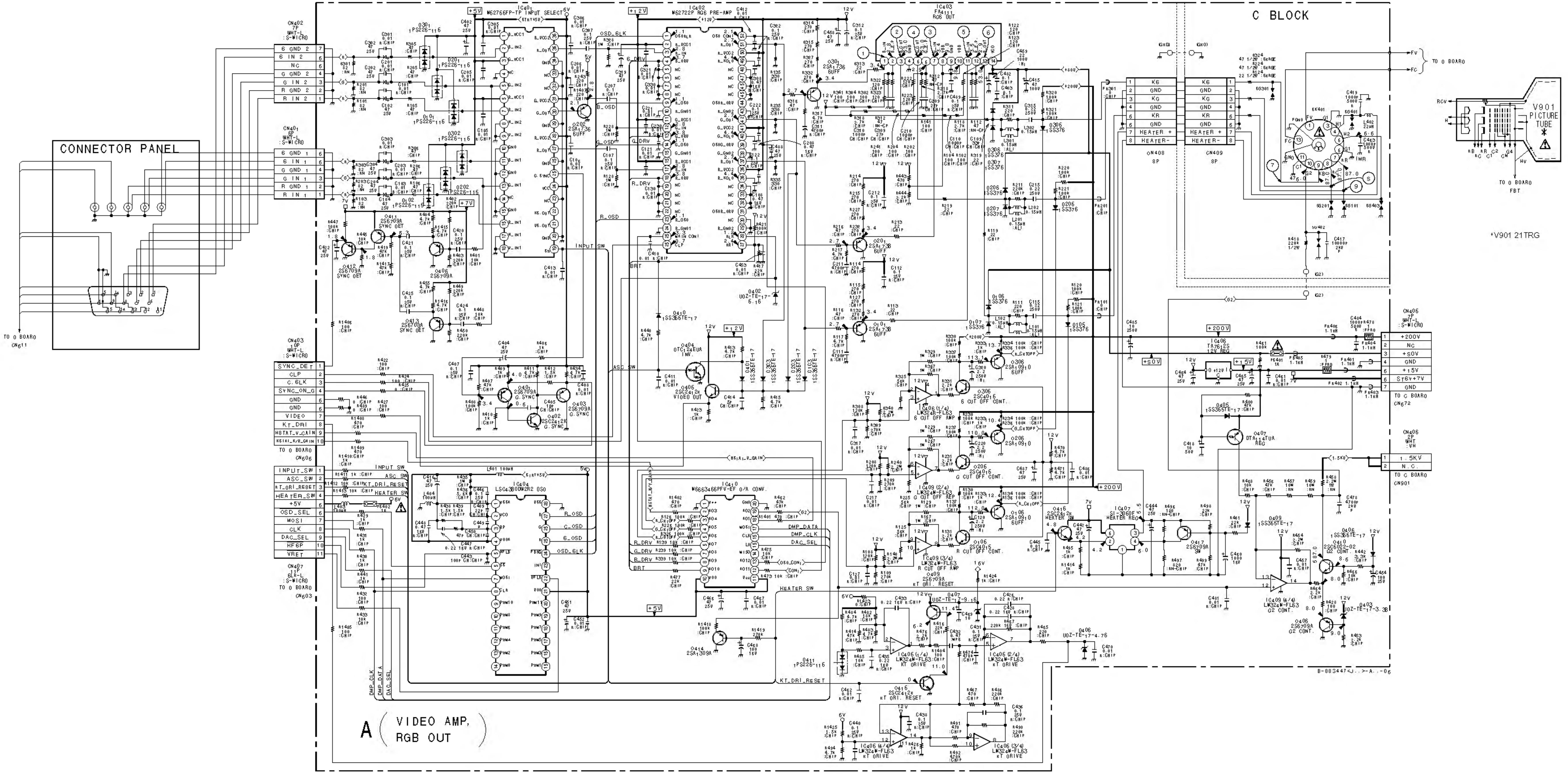
CONNECTOR PANEL
TO D BOARD
CN611
CN402
CN401
CN403
CN405
CN407
TO D BOARD
CN606
CN603
6 GND 2
G IN 2
NC
G GND 2
G IN 2
R GND 2
R IN 2
6 GND 1
6 IN 1
G GND 1
G IN 1
R GND 1
R IN 1
SYNC_DET
CLP
C.BLK
SYNC_ON_G
GND
GND
VIDEO
KT_DRI
INPUT_SW
ASC_SW
KT_DRI_RESET
HEATER_SW
+5V
OSD_SEL
MOSI
CLK
DAC_SEL
HFBP
VREF
IC401
M52756FP-TP INPUT SELECT
IC402
M52722P RGB PRE-AMP
IC403
FA4111 RGB OUT
IC404
LSC4380DW282 OSD
IC410
M66646FP-EF D/A CONV.
IC405 (1/4) LM324M-FL63 G CUT OFF AMP
IC405 (2/4) LM324M-FL63 G CUT OFF AMP
IC405 (3/4) LM324M-FL63 R CUT OFF AMP
IC406 (1/4) LM324M-FL63 KT DRIVE
IC406 (2/4) LM324M-FL63 KT DRIVE
IC406 (3/4) LM324M-FL63 KT DRIVE
IC409 (4/4) LM324M-FL63 G2 CONT.
IC407 HEATER REG
IC408 TA76L05 +5V REG
Q411 2SC709A SYNC DET
Q412 2SC709A SYNC DET
Q413 2SC709A SYNC DET
Q406 2SC709A
Q401 2SC709A G.SYNC
Q402 2SC2412K G.SYNC
Q403 2SC709A G.SYNC
Q404 DTC124EUA INV
Q405 2SC2412K VIDEO OUT
Q414 2SA1309A
Q416 2SC2412K HEATER REG
Q417 2SC709A
Q407 DTA114TUA REG
Q403 2SC709A G2 CONT.
Q408 2SC709A G2 CONT.
Q415 2SC2412K KT DRI. RESET
Q301 2SA1736 BUFF
Q201 2SA1736 BUFF
Q101 2SA1736 BUFF
Q202 2SA1736 BUFF
Q306 2SC4016 B CUT OFF CONT.
Q205 2SC4016 G CUT OFF CONT.
Q105 2SC4016 R CUT OFF CONT.
Q306 2SA1910 BUFF
Q206 2SA1910
Q106 2SA1910 BUFF
D402 UDZ-TE-17-6.1B
D406 UDZ-TE-17-4.7B
D403 UDZ-TE-17-3.3B
+5V
+12V
+200V
+80V
+7V
12V
5V
6V
R_OSD
G_OSD
B_OSD
OSD_BLK
INPUT_SW
ASC_SW
BRT
R_DRV
G_DRV
B_DRV
DMP_DATA
DMP_CLK
DAC_SEL
HEATER SW
KT_DRI_RESET
C BLOCK
KG
GND
KB
KR
HEATER +
HEATER -
CN408 8P
CN409 8P
CN406 7P WHT S-MICRO
+200V
NC
+80V
GND
+15V
S+6V+7V
GND
TO C BOARD
CN672
CN406 2P WHT VH
1.5KV
N.C.
TO C BOARD
CN901
TO D BOARD
FV
FC
FBT
V901 PICTURE TUBE
*V901 21TRG
G2
A (VIDEO AMP, RGB OUT)
8-883-447-J...-A...-06

(2) Schematic Diagrams of G, H1, H2, J and L Boards

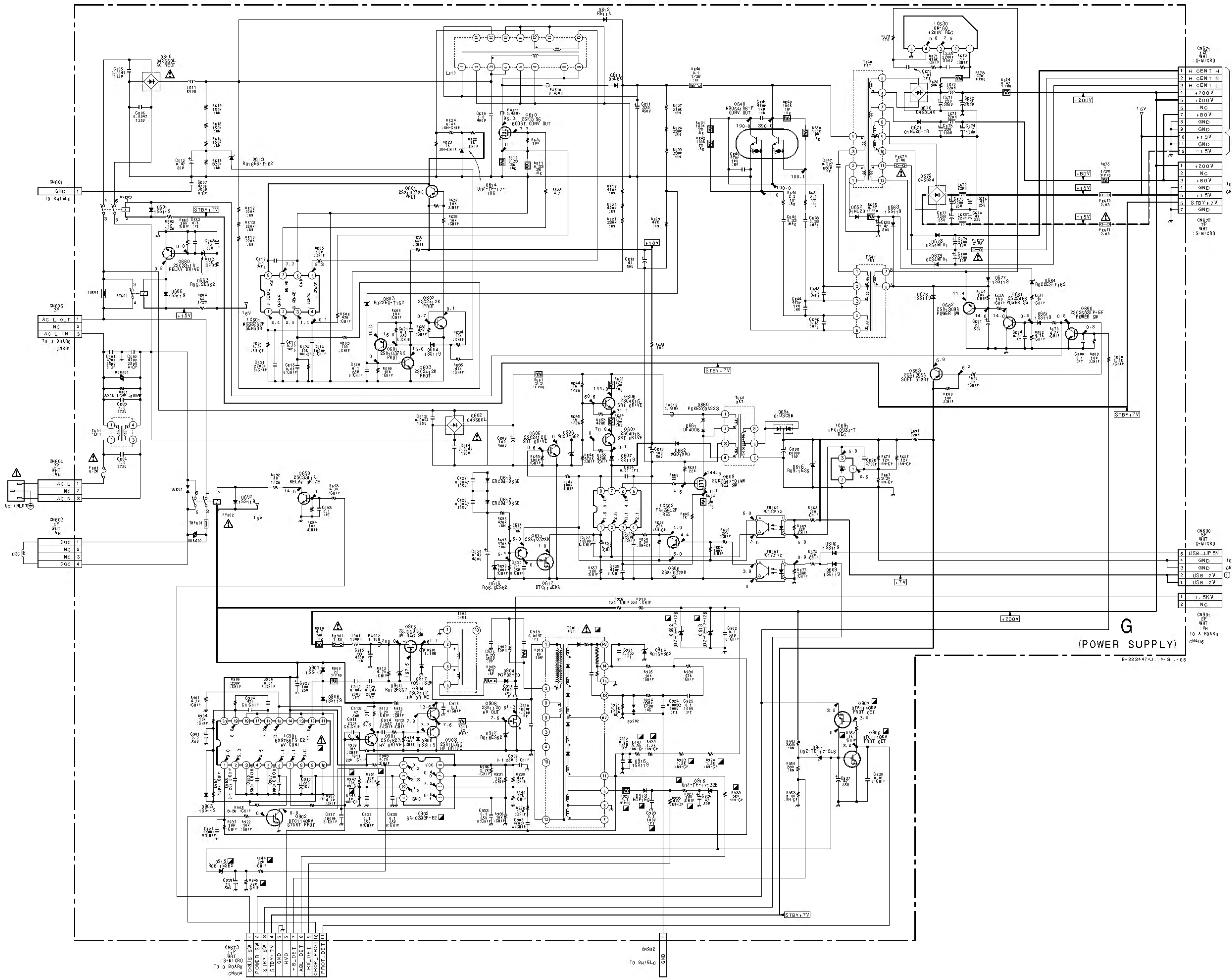
G
(POWER SUPPLY)

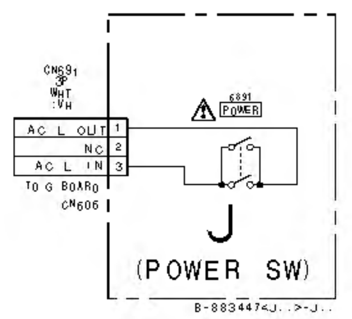

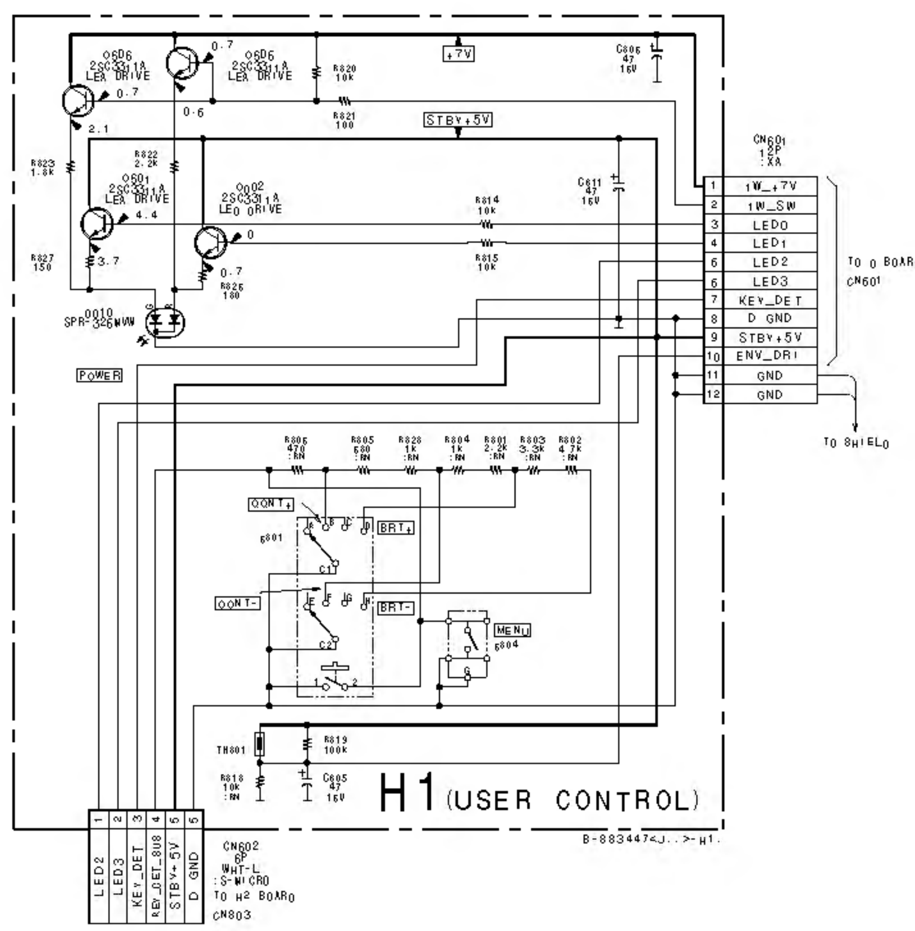
H1 (USER CONTROL)

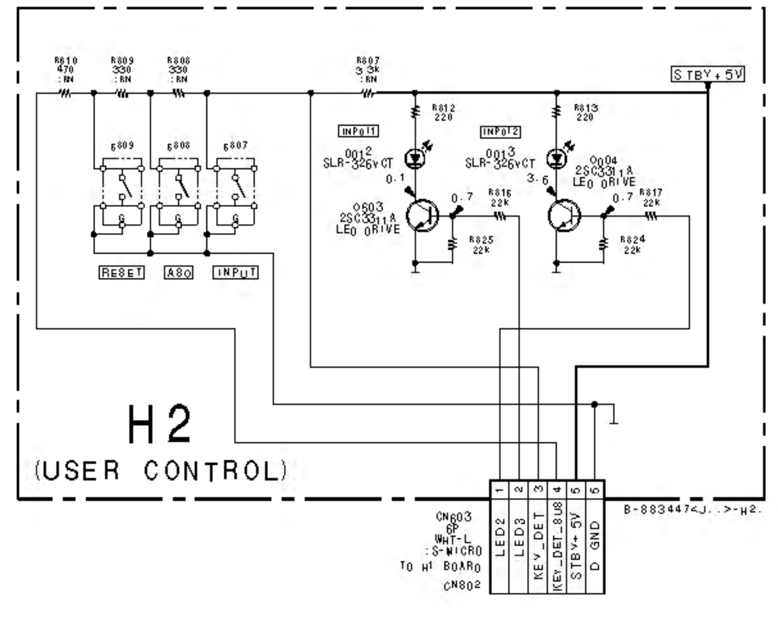
H2
(USER CONTROL)

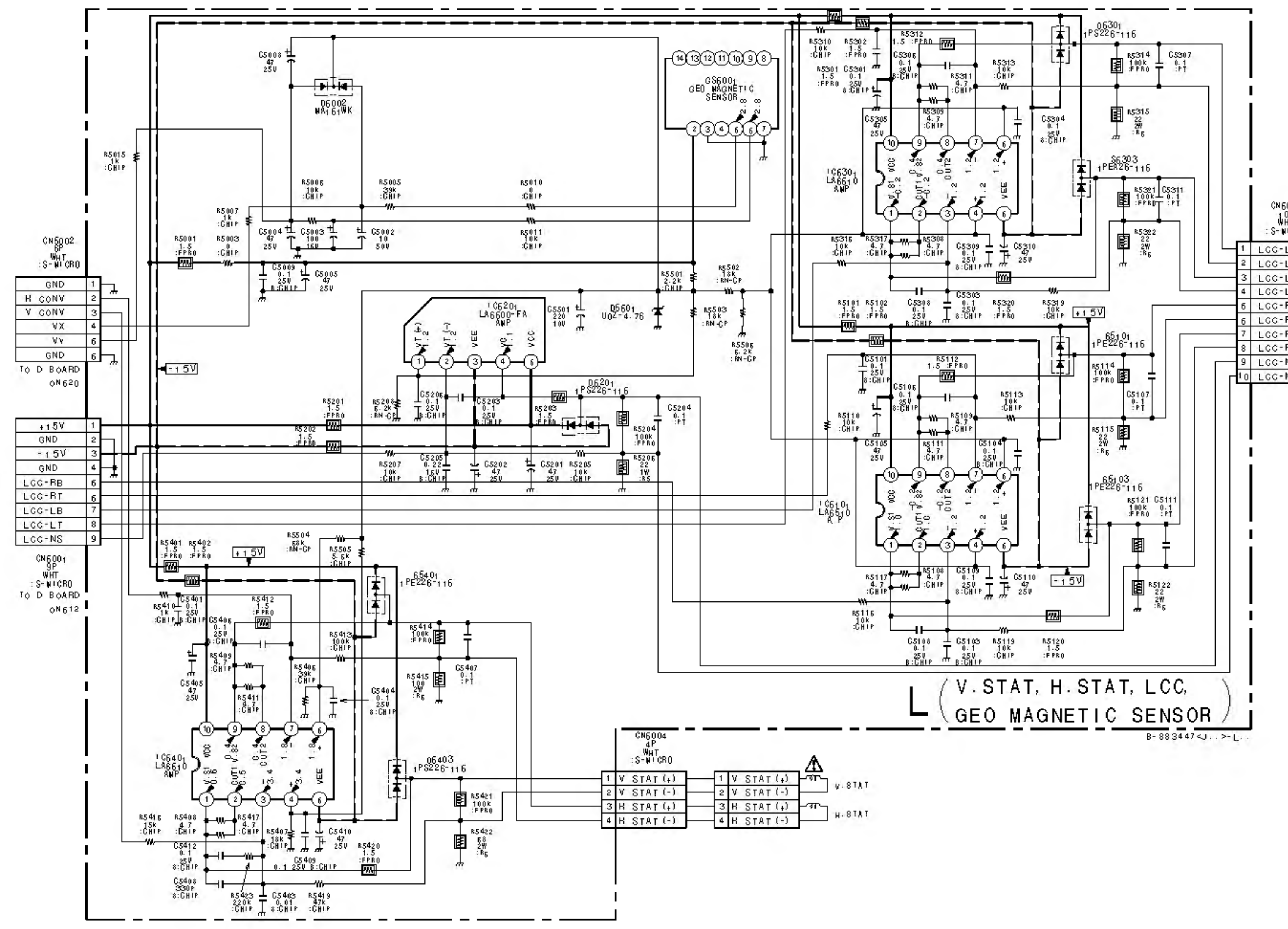
L (V.STAT, H.STAT, LCC, GEO MAGNETIC SENSOR)